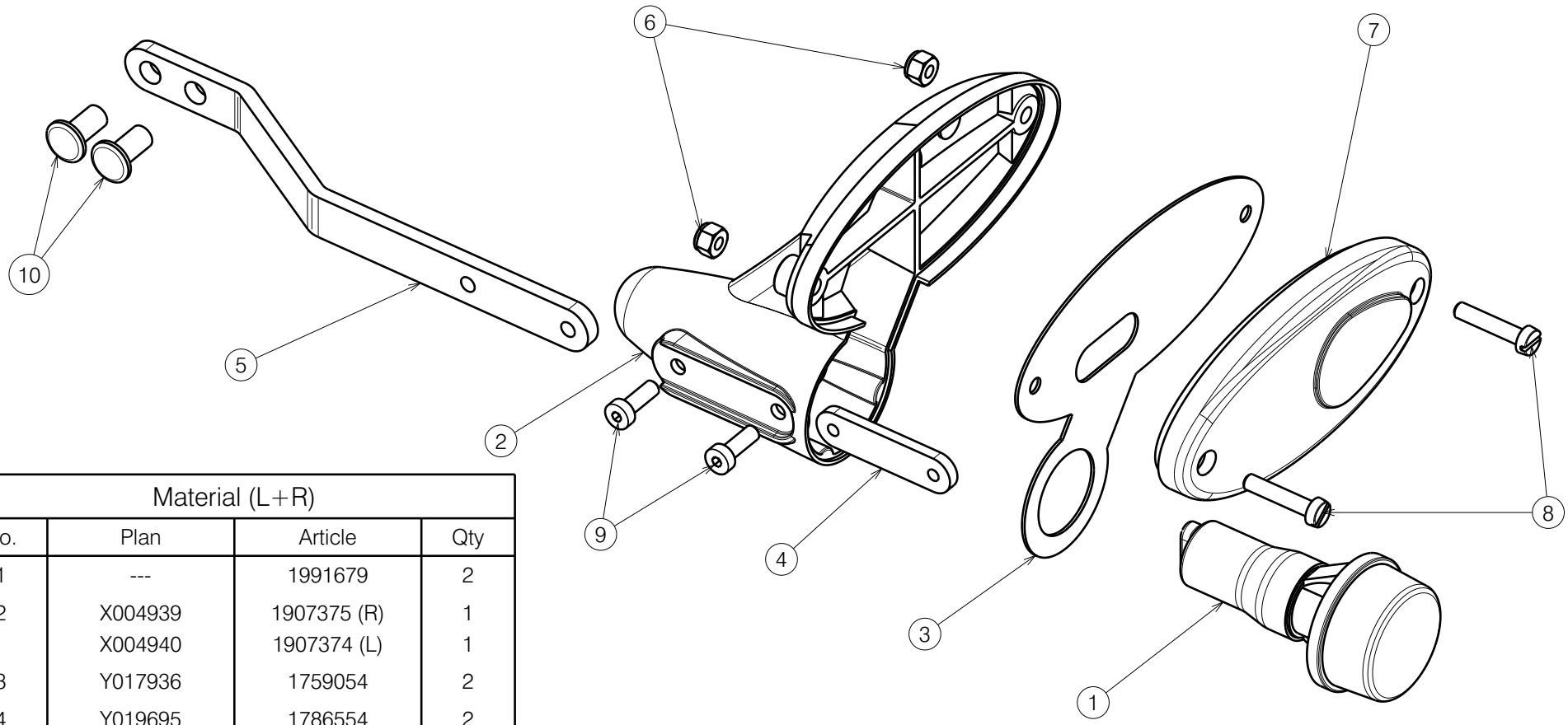

Material (L+R)			
No.	Plan	Article	Qty
1	---	1991679	2
2	X004939	1907375 (R)	1
	X004940	1907374 (L)	1
3	Y017936	1759054	2
4	Y019695	1786554	2
5	P00118243	2919754	2
6	---	1001678	4
7	---	1907338	2
8	---	1001466	4
9	---	1907582	4
10	---	1992835	4
11*	3.3 kOhm / 5W	1907520	1
12*	---	1991680	2

*=not depicted

**Front Lights acc. to E000705

NOTICE: THE INFORMATION CONTAINED ON THIS DRAWING IS PROPRIETARY TO VERMEIREN GROUP AND SHALL NOT BE DISCLOSED IN WHOLE OR IN PART, OR USED FOR ANY DESIGN OR MANUFACTURE, EXCEPT WHEN SUCH USER POSSESSES DIRECT WRITTEN AUTHORISATION FROM VERMEIREN GROUP

-

SE19 Right Rear Light Assembly ExpressVB

Plan No.
E00118875/A1.1

Scale: 2:3	Drafted	Verified	Confirmed
Date	28.11.2025	09.12.2025	09.12.2025
Initials	KA	KA	AZ

E00118875/A