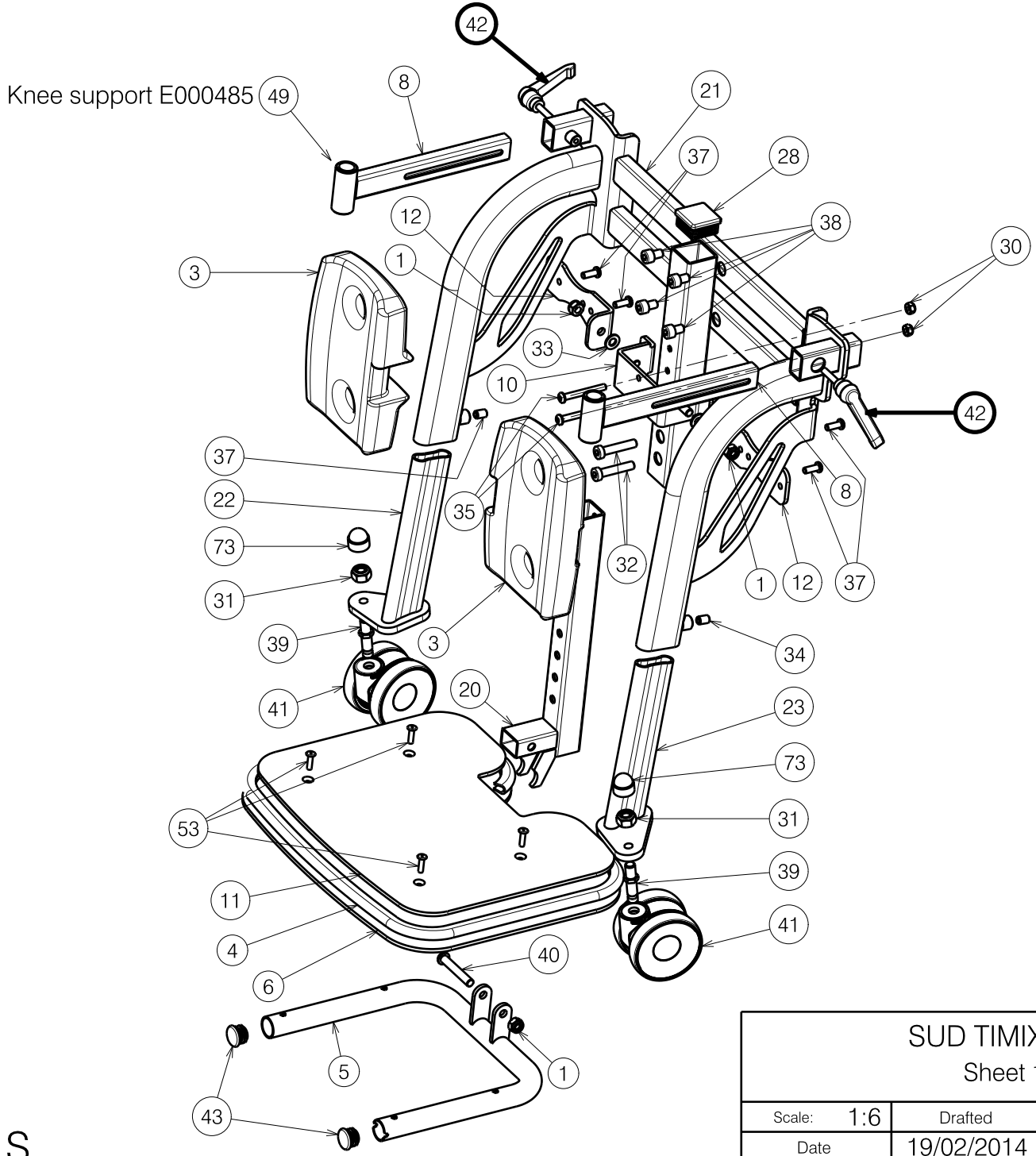

E000945 / S

SUD TIMIX / FOREST 3 Sheet 1/4 - Legrest				Plan No. E000945 / S
Scale: 1:6	Drafted	Verified	Confirmed	
Date	19/02/2014	14/10/2026	14/10/2026	
Initials	SD	DZ	MK	

2992200

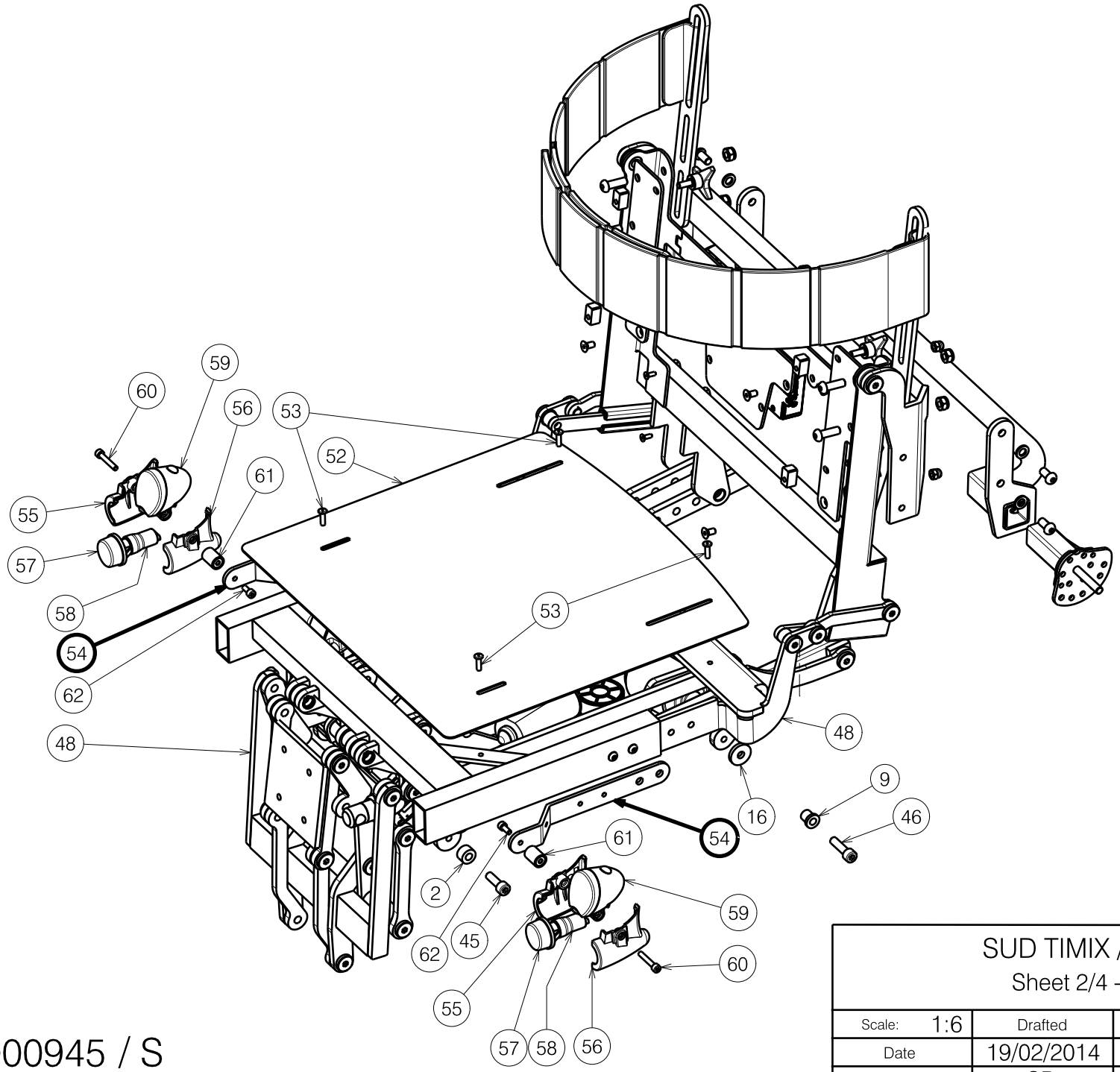

E000945 / S

2992200

SUD TIMIX / FOREST 3 Sheet 2/4 - Seat frame				Plan No. E000945 / S
Scale: 1:6	Drafted	Verified	Confirmed	VERMEIREN
Date	19/02/2014	14/10/2026	14/10/2026	
Initials	SD	DZ	MK	

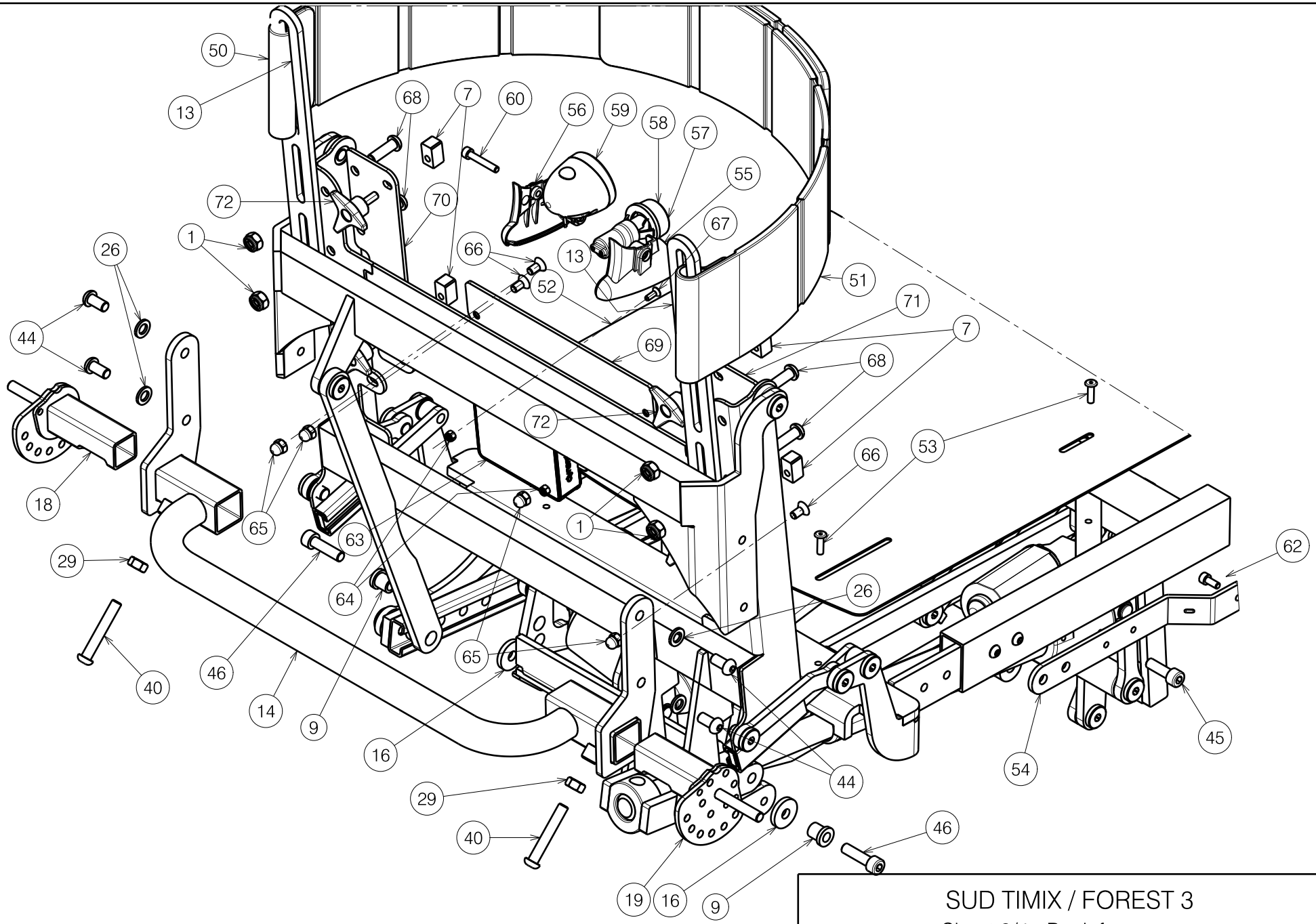

2992200

SUD TIMIX / FOREST 3 Sheet 3/4 - Back frame				Plan No. E000945 / S
Scale: 1:5	Drafted	Verified	Confirmed	VERMEIREN
Date	19/02/2014	14/10/2026	14/10/2026	
Initials	SD	DZ	MK	

E000945 / S

Material

No.	Plan	Article	Quantity
1	X001016	1001682	9
2	X003329	1996776	2
3	X004785	1905949	2
4	4mm	1906976	1
5	Y013036	1699554	1
6	Y013807	1699754	1
7	X002239	1494600	4
8	Y014362	1703100	2
9	X003403	1617400	2
10	Y018160	1776854	1
11	Y017773	1755754	1
12	Y018367	1778154	2
13	Y020081	1794154	2
14	Y020717	2003954	1
16	X004048	1902685	2
18	Y020718	2003754	1
19	Y020719	2003854	1
20	P00083441	2092454	1
21	P00083435	2092354	1
22	Y020138	1793654	1
23	Y020139	1793554	1
26	M8 DIN125	1001556	8
28	---	1001618	1
29	M8 DIN934	1001671	2
30	M6 DIN985	1001680	2
31	M10 DIN985	1001683	2
32	M8X40 DIN7984	1003066	2
33	M8 DIN125	1003199	2
34	M8x12 DIN916	1004885	2
35	M6x50 ISO7380	1006997	2
36	M6x20 ISO7380	1006999	2
37	M6x16 ISO7380	1008459	6
38	M8X12 DIN912	1008963	4
39	---	2992514	2

No.	Plan	Article	Quantity
40	M8x50 ISO7380	1902483	3
41	ϕ75	1918369	2
42	M6x30	2980198	2
43	ϕ22	1990648	2
44	M8x16 ISO7380	1991858	8
45	X001813	1001499	2
46	M8X30 DIN912	1992581	2
48	---	1914783	1
49	E000485	1903194	1
50	X004297	1903149	1
51	X004298	1903150	1
52	Y020905	2007754	1
53	ϕ4.8x17	1001586	8
54	Y020906	2007854	2
55	X004942	1907377	2
56	X004943	1907376	2
57	---	1991679	2
58*	---	1991680	2
59	---	1907340	2
60	M5X30 DIN912	1903983	2
61	---	1910745	2
62	M5X12 DIN912	1001489	2
63	ACT2	1912304	1
64	M4 DIN985	1001678	2
65	M6 DIN986	1008492	4
66	M6x12 DIN7991	1908566	4
67	M4X12 DIN7991	1908087	2
68	M8x25 ISO7380	1990501	4
69	P00027997	2081954	1
70	P00029441	2082254	1
71	P00028002	2082354	1

No.	Plan	Article	Quantity
72	M6x20	1009932	4
73	M10	1006355	2

Optional SE19 Lighting

* Not depicted

2992200

SUD TIMIX / FOREST 3

Sheet 4/4 - BOM

Plan No.

E000945/S

Scale: 1:5	Drafted	Verified	Confirmed
Date	19/02/2014	14/10/2026	14/10/2026
Initials	SD	DZ	MK

VERMEIREN