Bill of Material			
No.	Plan	Article	Quantity
1	XC00002	1C09726	2
2	XC00010	1C09826	2
3	X002134	1992411	2
4	X002139	1992426	2
5	X002140	1992427	2
6	X002141	1992435	2
7	X004801	1746026	2
8	X002165	1488300	4
9	X005277	17938	2
10	X005276	1793900	4
11	X005305	1910032 (L)	1
	X005306	1910033 (R)	1
12	Y012237	1670154	2
13	Y013768	1687354 (L)	1
	Y006737	1684254 (R)	1
14	--	1001493	4
15	M6 DIN127	1004414	2
16	M6x16 DIN912	1001492	2
17	M6x30 ISO7380	1009588	2
18	X002112	1001491	2

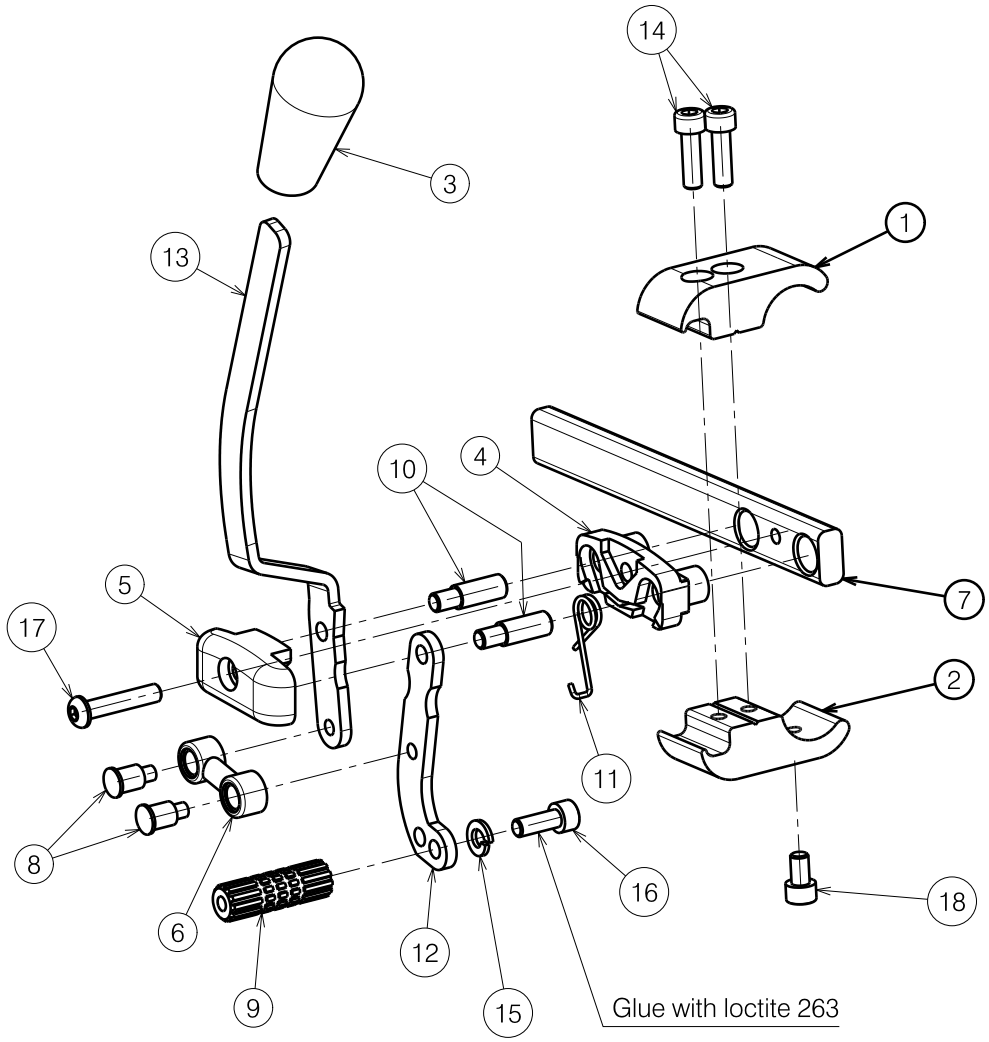

NOTICE: THE INFORMATION CONTAINED ON THIS DRAWING IS PROPRIETARY TO VERMEIREN GROUP AND SHALL NOT BE DISCLOSED IN WHOLE OR IN PART, OR USED FOR ANY DESIGN OR MANUFACTURE, EXCEPT WHEN SUCH USER POSSESSES DIRECT WRITTEN AUTHORISATION FROM VERMEIREN GROUP

Only left side depicted

1923021/
1923022

BOBBY EVO B74 BRAKE

Plan No.
E00116871/C

Scale: 2:5	Drafted	Verified	Confirmed
Date	16-10-2025	29/10/2025	29/10/2025
Initials	AR	SD	SD

VERMEIREN